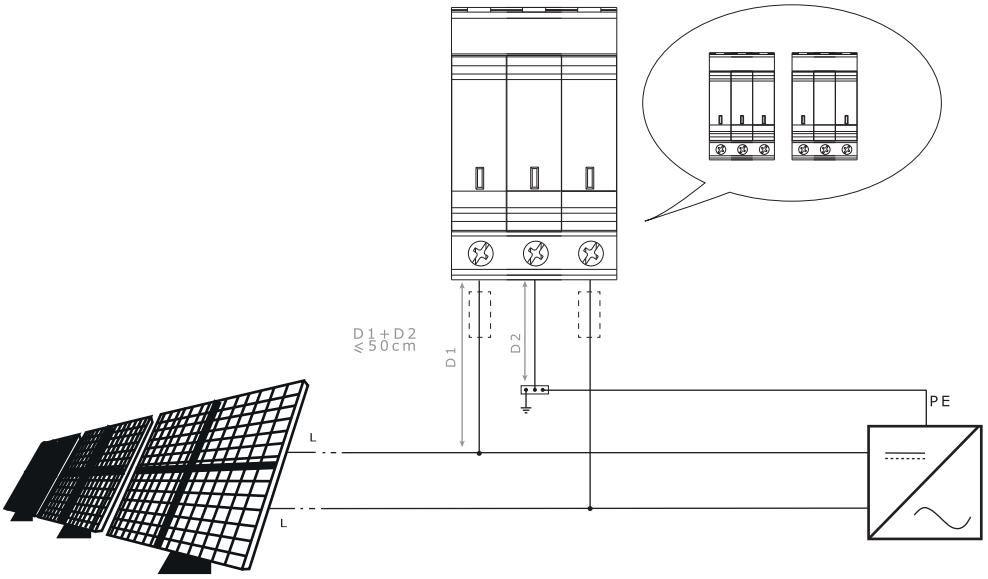

	IPE	Thermal disconnector		
OVR PV (T2) 40-600 P (TS) (BW) QS	⩽ 10 µA	Yes	EN 50539-11 Type 2	UL 1449 4th Ed. Type 1 CA (*) c UL us E322885
OVR PV 40-600 P (TS) U				
OVR PV (T2) 40-1000 P (TS) (BW) QS	⩽ 1000 µA			
OVR PV (T2) 40-1500 P (TS) (BW) QS				
OVR PV 40-1000 P (TS) U				
OVR PV 40-1500H P (TS) U				
			I < Iscpv ➡ I ⩾ Iscpv ➡ 10A gPV	No fuse needed

(*) Suitable for use on a circuit capable of delivering not more than 10 000 rms symmetrical ampers

(*) Convient à des circuits produisant au plus 10 000A eff

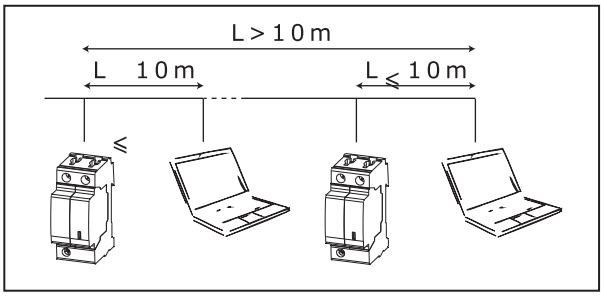

-40°C +85°C
-40°F +185°F

⩽ 95 %

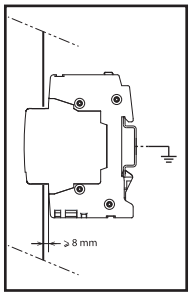

NEMA Type 1 Enclosure, Indoor Use Only

This device features an internal protection that will disconnect the surge protective component but will maintain power to the load – now unprotected. If this situation is undesirable for the application, follow the manufacturer's instructions for replacing the device

WARNING - Risk of Electric Shock

AVERTISSEMENT RISQUE DE CHOC – COUPER L'ALIMENTATION AVANT D'ENTREPRENDRE LE DÉPANNAGE

Attention ! Hazardous voltage ! Installation by person with electrotechnical expertise only

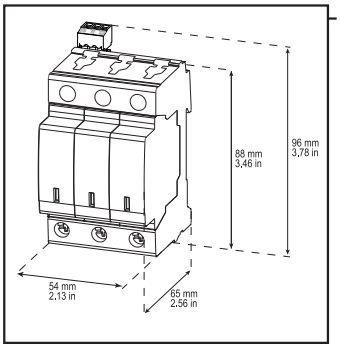

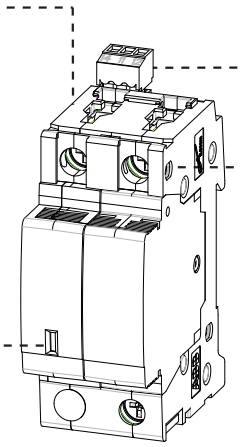

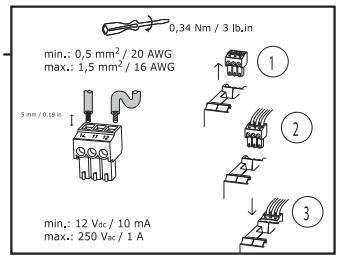

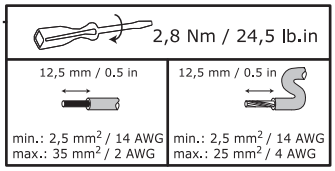

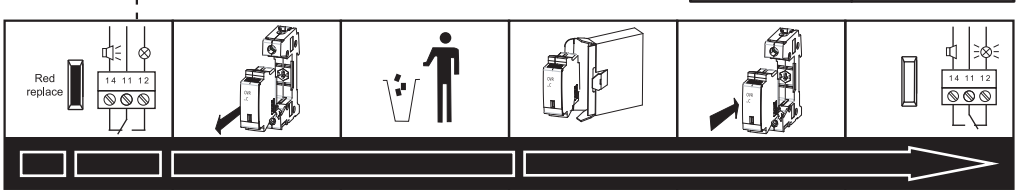

2CTB 8041__R __ __

Parafoudre
Surge Protective Device
Uberspannungsableiter
Scaricatore di sovratensioni
Pararrayo
Protecção contra sobretensões
Skydd mot överspänningar
Защита от перенапряжений
电涌保护器

2CTC432104M1701

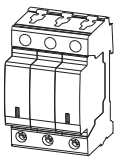

OVR PV (T2) 40-600 P (TS) (BW) QS
OVR PV 40-600 P (TS) U
...

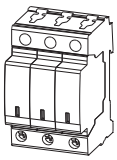

OVR PV (T2) 40-1000 P (TS) (BW) QS
OVR PV (T2) 40-1500 P (TS) (BW) QS
OVR PV 40-1000 P (TS) U
OVR PV 40-1500H P (TS) U
...

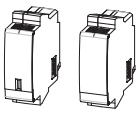

OVR PV (T2) 40-600 C QS
OVR PV 40-600 C U
OVR PV (T2) 40-1000 C QS
OVR PV 40-1000 C U
OVR PV (T2) 40-1500 C QS
OVR PV 40-1500H C U
OVR PV MC C (QS)
...

ABB FRANCE
BP 303
65203 BAGNERES DE BIGORRE
www.abb.com